COMMENTARY (REV C....11/17)

1. REPORT PRESENTATION

1.1 Follow the instructions for the PVDR and VDR in Appendix D and F in the regulations. The most effective and efficient way to present your design is with the use of assembly and break-out drawings with dimensions showing all the essential parts. For example, for a hub and axle assembly, the drawing should show the axle, bearings, hub, brake disk with call outs for each part with part number for purchased parts and the material designation for the manufactured parts. In essence, the drawing should contain all relevant information describing the parts in the assembly. Avoid long wordy descriptions. Pictures, sketches, drawings, etc, are better than words in describing your vehicle and can substitute for text. As stated in the instruction for the PVDR and VDR, **submit all reports in PDF format and in 10-point font size or greater.**

2. MATERIAL SELECTION

2.1 Material properties presentation must include the as-welded condition of the steel that is not heat treated, or the welded aluminum properties achieved after it is heat treated, or properties achieved through aging if it is not heat treated. For information on the natural aging of aluminum, Google "Natural Aging of Heat Treatable Aluminum Alloys. See a sample website below and scroll down to the paragraph entitled "Heat Treatable Alloys."

http://www.lincolnelectric.com/en-us/support/welding-how-to/Pages/aluminum-design-mistakes-detail.aspx

2.2. The presentation of FEA results should show the factor of safety (FOS) which will include the material properties used in the analysis. The yield strength of the material should be clearly stated in the FEA results.

3. CRITICAL COMPONENTS

3.1 The designer must be aware of the possible failure modes for each part that is designed and how that failure can impact the safety of the driver. Components where failure can cause serious harm to the driver are considered to be critical components. The structural report must include a detailed engineering analysis that provides the rationale for the selection and/or configuration for **all** critical components. For example, the size, configuration, and material selection for an axle must be accompanied with detailed description/sketch of the axle followed by an engineering analysis that calculates the loads and stresses which were the basis for the design of the axle. The analysis can be in the form of traditional methods, or

FEA. Also, sample testing is an acceptable means of proving structural integrity.

3.2 The 2-G bump,1-G braking and the 1-G turn loads are the input loads to be used for the design of the vehicle. **They are to be applied to the wheel patch where the wheel makes contact with the ground.** The analysis that is generally done is a static analysis even for elements that are actually under dynamic loading. The use of these input loads introduce a factor of safety when a static analysis is done which in effect compensates for the fatigue analysis that is not done. Also, it is not unforeseen that in emergency situations, the 2-1-1 G loads can and do occur in combination or simultaneously. This would represent a worse case loading condition that the designer should always consider. Finally, the designer needs to consider how these input loads are transferred to the frame via the suspension system and how the frame can withstand said loading.

4. Roll Cage.

4.1 Below are three roll cage configurations that present the necessary features that The diagonal tubes member in Figure 1 and 2 provides the structure with a means of resisting high components of longitudinal loads that might collapse the roll cage. In other words, without this diagonal piece the roll cage becomes a "4-bar linkage" which will create high stress levels at the welded joints when the roll cage is subjected to high components of longitudinal loads. Also, the diagonal piece will make the roll cage structure more rigid, stronger per unit weight, and less subject to possible collapse given high enough longitudinal components of said loads. In all cases, the horizonal member and/or the diagonal members should be attached to the roll bars as high up on the roll bars as possible. **Asymmetrical roll cages are not recommended.**

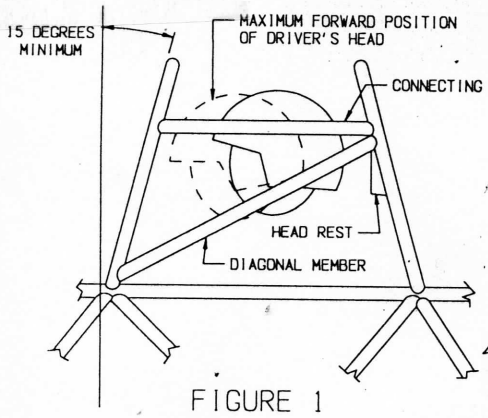

FIGURE 1

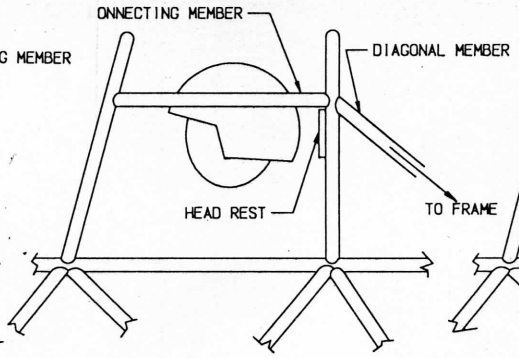

FIGURE 2

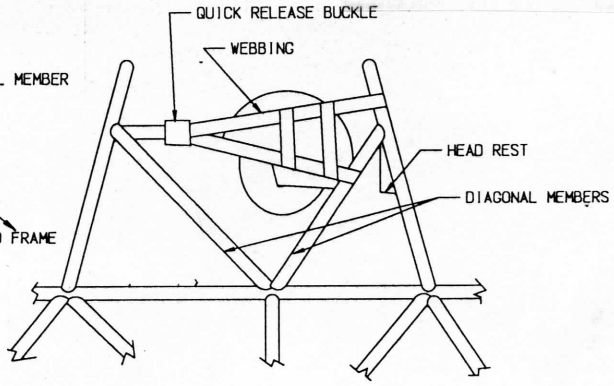

FIGURE 3

4.2 The front and rear members of the roll cage shall be sloped to deflect the body panels up and away from the driver in the event of a collision that could break the panel from their latched position. Figure 1 shows a minimum slope on the roll bars of about 15 degrees. This angle is not specified in the rules but is recommended as a minimum value of slope the designer should seriously consider. The front roll bars shall be positioned far enough in front of the driver's head so when the driver's head is thrown forward in a frontal collision, the driver's head will remain within the roll cage envelope. See Figure 1.

4.3 The roll cage shall be mounted to the frame at points that are rigid and supported in a manner that will sustain the vertical loads applied to the roll cage without undo bending of frame members.

5. A-ARMS

5.1 For an efficient design, the a-arm links should be straight members with the center line (centroid) of the links along the line joining the pivot at the upright and each pivot on the chassis.

5.2 For the pivot/bearing connection between the a-arm and upright, there are two choices, rod ends or spherical bearings. The latter is more suited for this application and is the preferred choice. Should a spherical bearing connection be chosen, the housing in which the bearing is mounted must have a shoulder on the top of the bearing to take the heavy bump loads and a retainer ring on the bottom to constrain the bearing for the rebound loads. This applies particularly to the a-arm that has the shock load that supports the wheel assembly. For standard profile spherical bearings, the thrust load capacity is about 20% of the radial load capacity, as given in the manufacturer's catalog. If high mis-alignment spherical bearings are chosen, the thrust load capacity is 10% of the radial capacity. Friction, of a press fit cannot be used to keep the spherical bearings in place. Swaging the bearings in place is risky and should not be considered unless professionally done. If rod ends are chosen for this connection, the following must be included in the PVDR and VDR: (1), a static analysis to determine the loads on the two joints supporting the upright, and (2), an analysis to determine the stresses on the rod end showing how the rod end size and quality are selected. Rods ends are considered to be critical components. For assistance in doing this analysis, check out "Rod End Stress Calculations" on the ASC website. If spherical bearings are chosen, this analysis will not be required.

6. BRAKES

6.1 The redundant braking system required in the regs can be front-to-back or front wheels only. Never side to side. Front wheel braking only is very suited for 3-wheel vehicles because with an equal weight distribution on all three wheels, two-thirds of the static vehicle weight is on the front wheels. It should be noted that a rear brake in a front-rear arrangement in a 3-wheel vehicle having so little static weight on the rear wheel may not provide much braking should the front brakes fail. How the rear brakes perform, should the front brakes fail in a 4-wheel vehicle, will depend on the weight distribution front to rear

Figure 4 below shows an acceptable braking system for front wheel braking only. Figure 5 below shows an acceptable braking system for 4-wheel braking.

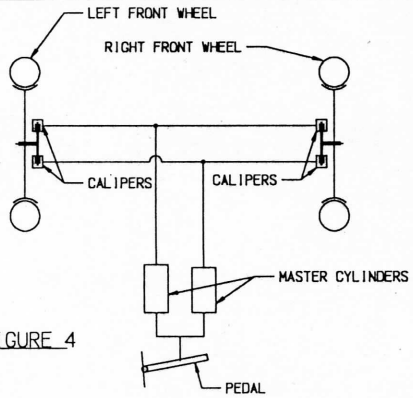

FIGURE 4

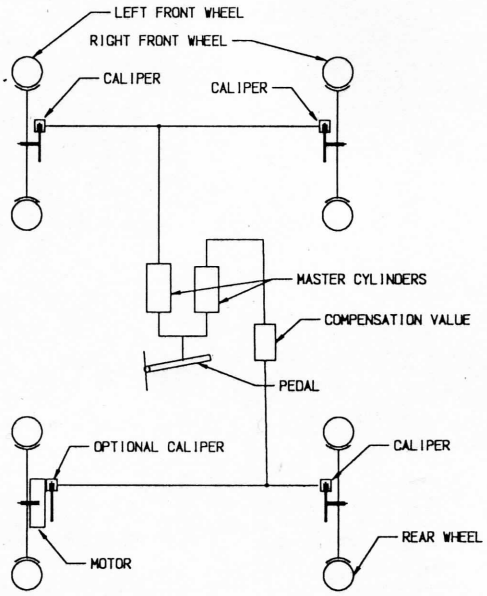

FIGURE 5

6.2 Front-rear braking systems usually require a compensating value for the rear brakes particularly in a 3-wheel vehicle. Volume limiting valves are not permitted. Teams using a compensation valve will be required to provide a way to lock the setting of the value so that it cannot be changed from the setting used at the time the vehicle qualifies at the dynamic testing part of scrutineering. Also, the valve should be positioned in the vehicle so that the driver cannot reach the value while driving. In essence, the vehicle must race with the equipment and settings it qualified with. Generally, each circuit of the primary braking system is operated from two identical master cylinders. A tandem master cylinder is also acceptable. Different master cylinders or calipers with different size pistons should not be used

6.3 There are two different ways the master cylinders can connect to the pedal. The first is via a balance beam on the pedal which can provide a limited compensation in line pressure for the two braking circuits. If the two circuits operate front wheel brakes only, the ideal balance position should make the pressure equal in both circuits. For front-rear braking, the balance beam arrangement may provide only limited compensation for the rear brakes and will require an additional compensation value.

The second method for connecting the pedal to the master cylinders is via a direct/hard connection to the pedal. In this arrangement, both master cylinders will have the same displacement. However, equal displacement does not mean equal force applied to each of the two master cylinders. The pedal force will be divided up between the two master cylinders. The pedal force to each master cylinder will depend on how the caliper pads are adjusted and how much piston travel in the calipers must occur before the pads to make contact with the disk. As the brake pads wear, the pressure should become more equal

The direct connection between the pedal and master cylinders does provide a better chance for adequate braking power should one system malfunction. If one system leaks and/or looses line pressure, the functioning master cylinder will receive all of the pedal force and possibly provide the same braking as when both circuits are functioning properly.

6.4 Several choices are possible regarding calipers and disks. There are calipers that are hard mounted and calipers that float. Same for the disks. Some calipers come with pistons on both sides of the disk and some with one piston on one side of the disk with a slave side. The latter is the type of brake caliper street vehicles have. Some calipers come with retractable pads that will eliminate contact between the pads on the disk when the brakes are dis-engaged. In solar car racing, the calipers that eliminate frictional contact between pad and disk when brakes are released, are clearly the best choice. However, these calipers that best eliminate drag when the brakes are released will be those that have pistons on both sides of the disk and are hard mounted. Retracting the pad away from the disk when the brakes are not in use is accomplished two ways: The first uses the seal that retracts the pad and tends to make these calipers self-adjusting. The second method uses springs that provide a positive force to retract the pads. The second method of retracting the pads is more reliable. It is very difficult to have floating calipers that will provide zero rubbing between pad and disk when brakes are released.

6.5 As stated in the regs, the parking brake must be independent of the primary braking system, meaning, the parking brake cannot share pressure lines or the pedal for the primary braking system. Also, a parking pawl is acceptable.

6.3 There are two different ways the master cylinders can connect to the pedal. The first is via a balance beam on the pedal which can provide a limited compensation in line pressure for the two braking circuits. If the two circuits operate front wheel brakes only, the ideal balance position should make the pressure equal in both circuits. For front-rear braking, the balance beam arrangement may provide only limited compensation for the rear brakes and will require an additional compensation value.

The second method for connecting the pedal to the master cylinders is via a direct/hard connection to the pedal. In this arrangement, both master cylinders will have the same displacement. However, equal displacement does not mean equal force applied to each of the two master cylinders. The pedal force will be divided up between the two master cylinders. The pedal force to each master cylinder will depend on how the caliper pads are adjusted and how much piston travel in the calipers must occur before the pads to make contact with the disk. As the brake pads wear, the pressure should become more equal

The direct connection between the pedal and master cylinders does provide a better chance for adequate braking power should one system malfunction. If one system leaks and/or looses line pressure, the functioning master cylinder will receive all of the pedal force and possibly provide the same braking as when both circuits are functioning properly.

6.4 Several choices are possible regarding calipers and disks. There are calipers that are hard mounted and calipers that float. Same for the disks. Some calipers come with pistons on both sides of the disk and some with one piston on one side of the disk with a slave side. The latter is the type of brake caliper street vehicles have. Some calipers come with retractable pads that will eliminate contact between the pads on the disk when the brakes are dis-engaged. In solar car racing, the calipers that eliminate frictional contact between pad and disk when brakes are released, are clearly the best choice. However, these calipers that best eliminate drag when the brakes are released will be those that have pistons on both sides of the disk and are hard mounted. Retracting the pad away from the disk when the brakes are not in use is accomplished two ways: The first uses the seal that retracts the pad and tends to make these calipers self-adjusting. The second method uses springs that provide a positive force to retract the pads. The second method of retracting the pads is more reliable. It is very difficult to have floating calipers that will provide zero rubbing between pad and disk when brakes are released.

6.5 As stated in the regs, the parking brake must be independent of the primary braking system, meaning, the parking brake cannot share pressure lines or the pedal for the primary braking system. Also, a parking pawl is acceptable.

7. Steering

7.1 Commercially available rack and pinion steering units typically used in solar cars are generally sold with a u-joint that has a split, splined connection to the pinion shaft on one side of the u-joint and a hub or sleeve for welding or pinning to the steering column on the other. Welding the u-joint to the steering column is the preferred method of attachment. If pinning the u-joint to the steering column is chosen, the size of the pin should not be more than ¼ of the diameter of the steering column. Also, there should be zero backlash between the steering wheel and the pinion shaft.

7.2 The forces on the steering stops should be considered significant impact loads that could occur during emergency situations. The stationary half of the steering stop needs to be designed and mounted so that no binding will occur in the system when the moving part of the steering stop contacts with the stationary part. It is not recommended that the steering stops be on the upright. In the sketches below, two acceptable steering stops are shown. In Figure 5, the pin diameter should not exceed ¼ of the rack diameter (d<1/4D). In Figure 7, the sleeve over the rack can usually fit under the bellows if the rack is covered, and can be made of a softer material like PVC to provide a 'softer contact', and 'L' is cut to length to provide the required travel.

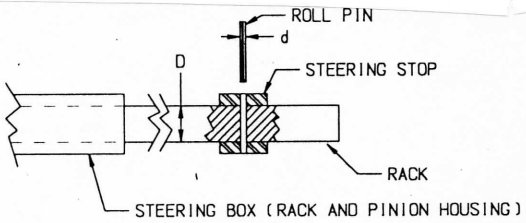

FIGURE 6

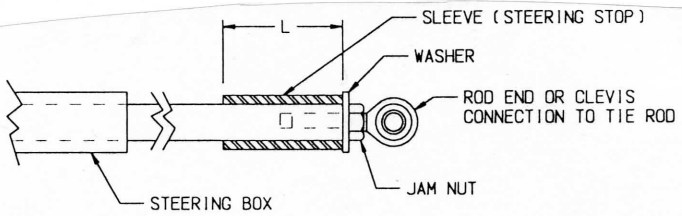

FIGURE 7

7.3 A cautionary note: At the pre-race qualifier, all vehicles will be inspected for interference between the wheels and body parts. A static lock-to-lock test will be performed to see in interference occurs. However, the designer needs to consider that compliance of wheel, suspension, and body parts under dynamic loads might occur during actual road conditions in an emergency. Also, the possibility of interference needs to be considered when the wheel moves through a full vertical movement of the suspension and when bump steer occurs.

8. SEAT BELTS

8.1 See ASC regulations for seat belt requirements.